– INSTRUCTION MANUAL –

CLOCHE

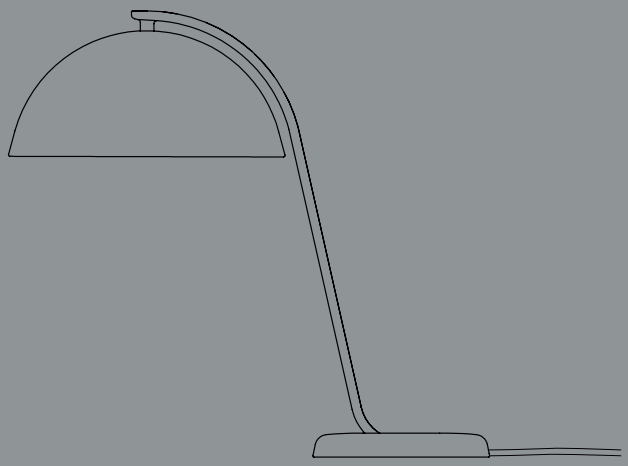

DESIGN BY LARS BELLER FJETLAND

HAY

TECHNICAL DATA

This product is fitted with an E14 bulb fitting and supplied with a suitable LED bulb. HAY recommends using the supplied bulb with this lamp.

FITTING TYPE | LED E14
POWER (W) | 5,5W
COLOUR TEMPERATURE | Warm white

HAY will not accept any responsibility for any accidents, injuries or damages that occur due to the use of incorrect bulbs.

ATTENTION

Ensure that the power supply to the circuit has clearly been turned OFF before installing the product. In some countries, electrical installation must be carried out by authorised electricians/ contractors; please check with your local authority for guidance.

The product must not be modified in any way. HAY accepts no responsibility for any products that have been modified or tampered with. If the external flexible cable or cord of this luminaire is damaged, it should be exclusively replaced by a qualified electrician in order to avoid an electrical hazard. This lamp is designed for indoor use only.

CARE AND MAINTENANCE

The product can be cleaned with a soft damp cloth and mild detergent, or a dry microfibre cloth. Do not use alcohol or any other solvents to clean the product and avoid using abrasive or rough sponges. Ensure that the power supply has been turned OFF before cleaning the product.

- PARTS -

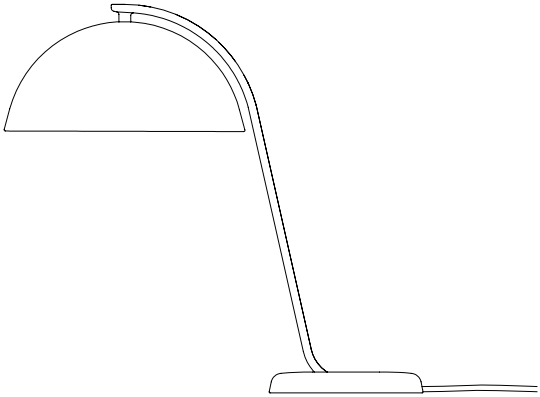

Lamp

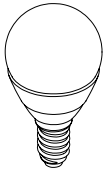

LED Bulb

1.

Unpack all the parts and check that you have received all the parts listed. Make sure the light is unplugged from the mains power. To install the bulb, place one hand on the bulb holder and gently twist the bulb clockwise as shown below.

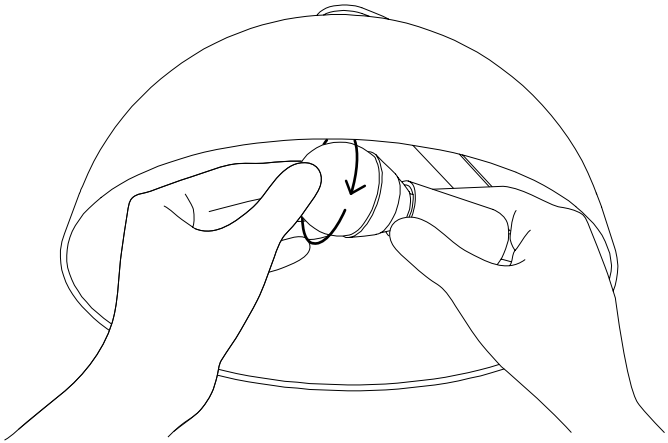

– UK CUSTOMERS ONLY –

For UK customers, a plug converter will be supplied. If not included, please contact the HAY retailer from where the lamp was purchased.

Insert the EU plug into the converter provided. Close the converter over the EU plug with the pins secured in the internal spring clip contacts. Screw the converter together to ensure the UK plug is secure.

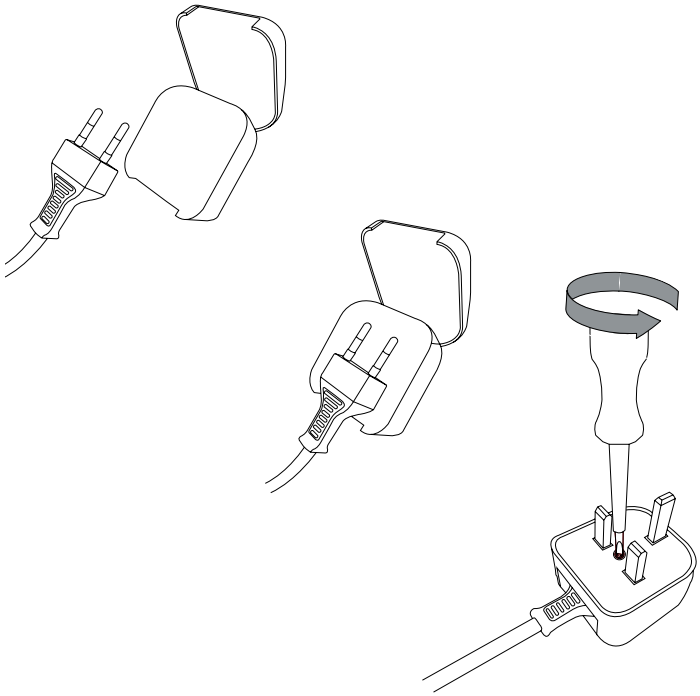

– CARE & MAINTENANCE –

Our Care & Maintenance offers guidance for optimal maintenance of your HAY product. It includes advice and instructions on cleaning and caring for specific materials to prolong the life of your lighting.

Please find our Care & Maintenance guide by scanning the QR code

You can find more relevant information on Cloche by scanning the QR code

You can also find the same information here hay.dk/downloads

Havnen 1 8700 Horsens Denmark
+45 4282 0282 / hay@hay.com

www.hay.com

14/10/2021

HAY